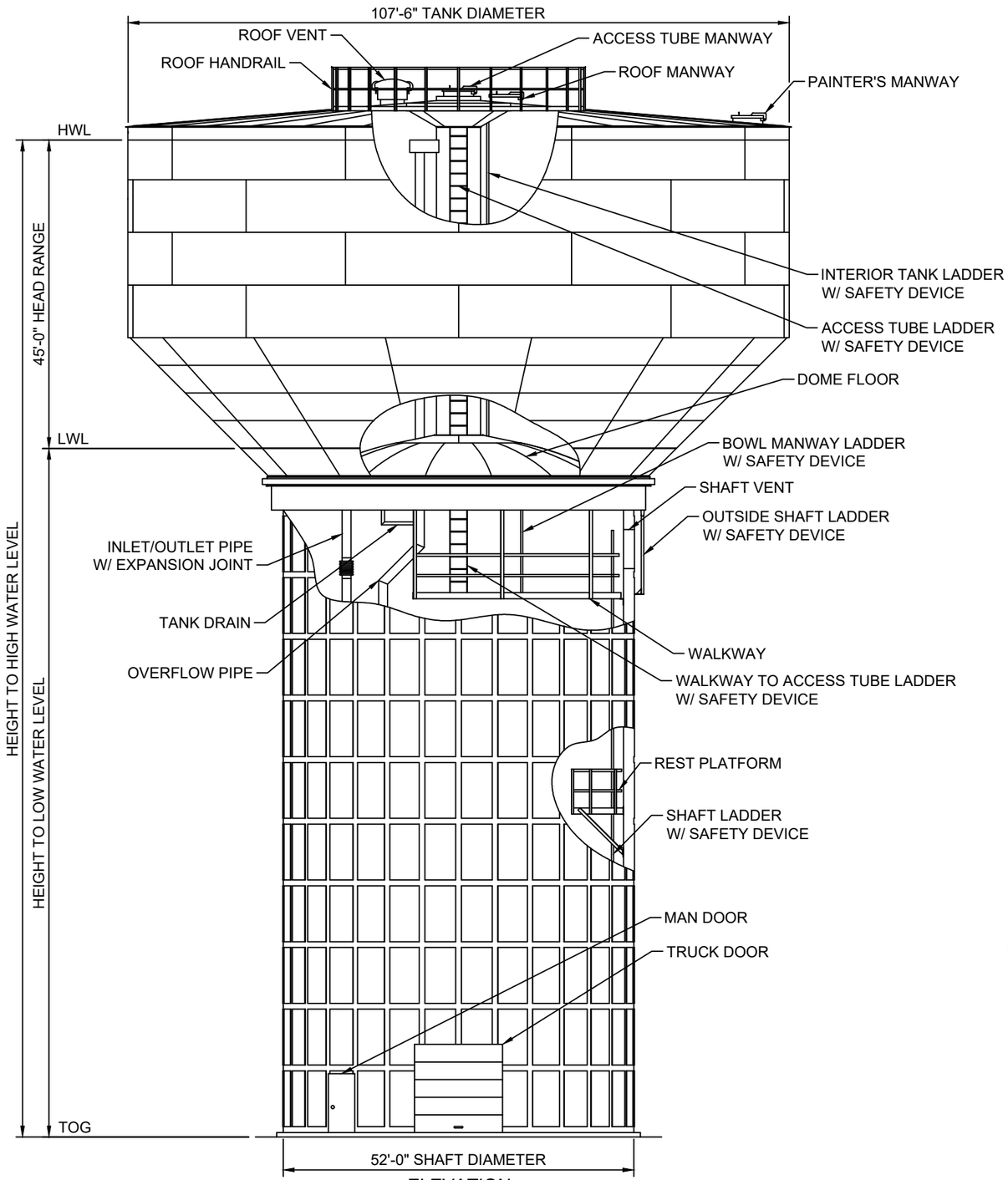

ELEVATION

1. DESIGN CRITERIA

1.A. THE TANK AND SUPPORT STRUCTURE SHALL BE DESIGNED, FABRICATED, AND ERECTED IN ACCORDANCE WITH AWWA D107-10 AND THE PROJECT SPECIFICATIONS.

1.B. LOADING CRITERIA:

1.B.A. DESIGN WIND VELOCITY - _ _ _ _ _ _ _ _ MPH

1.B.B. DESIGN SNOW LOAD - _ _ _ _ _ _ _ _ PSF

1.B.C. MCE SPECTRAL RESPONSE ACCELERATION - 0.2 - SEC PERIOD (S_S) - _ _ _ _ _ _ _ _

1.B.D. MCE SPECTRAL RESPONSE ACCELERATION - 1.0 - SEC PERIOD (S_1) - _ _ _ _ _ _ _ _

2. MATERIALS

2.A. STEEL PLATE: ASTM A283 OR ASTM A36

2.B. STRUCTURAL SHAPES: ASTM A36

2.C. LADDER RUNGS: ASTM A706

3. GENERAL

3.A. ALL ACCESSORIES SHOWN ON THE ELEVATION DRAWING ARE ROTATED FOR CLARITY.

3.B. ALL LADDERS, LADDER SAFETY DEVICES, PLATFORMS, HANDRAILS, ETC. SHALL CONFORM TO CURRENT OSHA REGULATIONS.

3.C. SURFACE PREPARATION AND COATING REQUIREMENTS SHALL BE IN ACCORDANCE WITH THE PROJECT SPECIFICATIONS.

3.D. THE TANK SHALL BE DISINFECTED IN ACCORDANCE WITH AWWA C652-02.

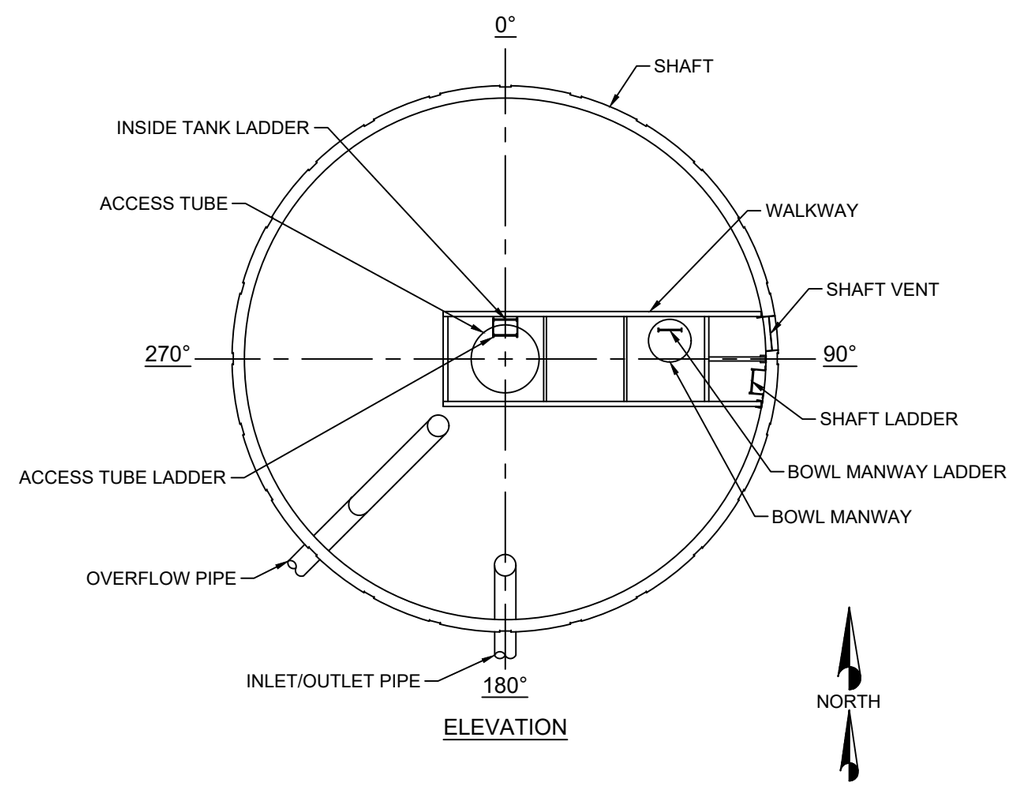

ELEVATION

Rev. By	Rev. Date	Revision Description

Copyright © 2017 by Phoenix Fabricators & Erectors, LLC. All rights reserved.

2,500,000 GALLON ELEVATED COMPOSITE TANK

GENERAL ELEVATION

Engineer: Drawn By: Checked By: Date:

PHOENIX FABRICATORS AND ERECTORS, LLC
Avon, Indiana - Sebree, Kentucky

JOB. No.

SHEET